Tech 100 Restrictor Stay

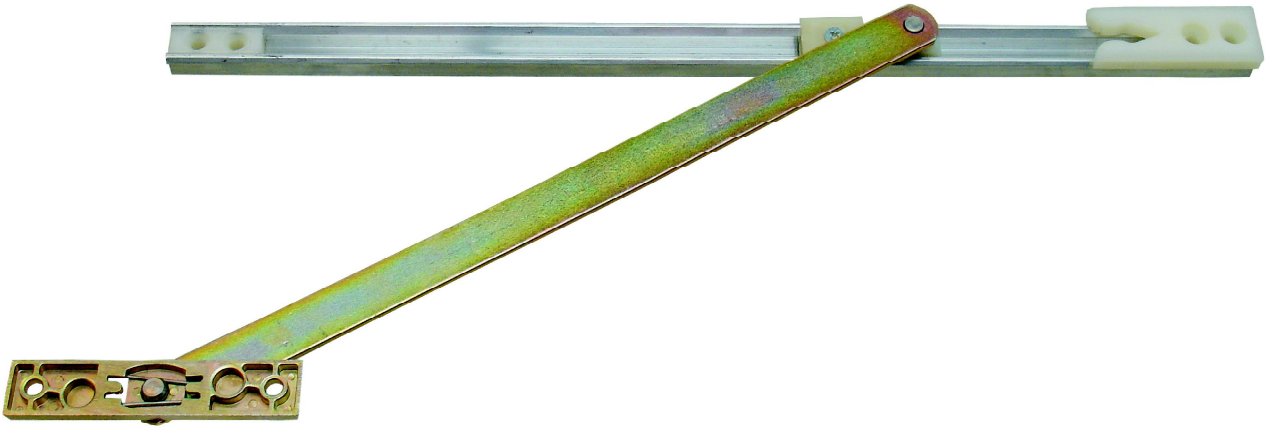

MACO TECH 100 - *Restrictor Stay*

- 90 Degree break stay and restrictor for doors
- Unique end snapper helps hold the door open
- Available with a yellow chromate or stainless steel arm
- Suitable for PVCu, aluminium and timber doors
- Adjustable friction device
- Suits all eurogrooved profile systems
- Fast and simple to fit
- Non handed
- Multiple screw ports
- Universal striker plate

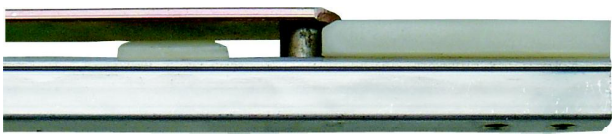

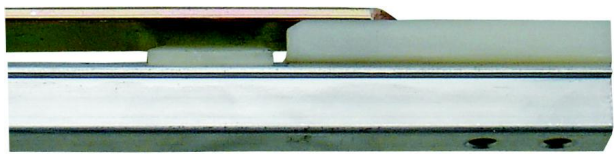

TECHNOLOGY IN MOTION

PDF created with FinePrint pdfFactory trial version http://www.fineprint.com

Fitting Instructions

1. Position the *Tech 100 Stay* onto the head of the door sash 105 mm from the sash rebate corner on the hinge side.

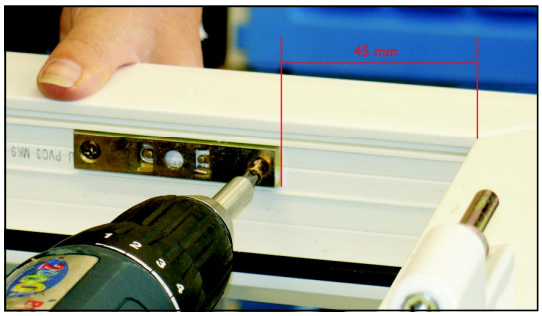

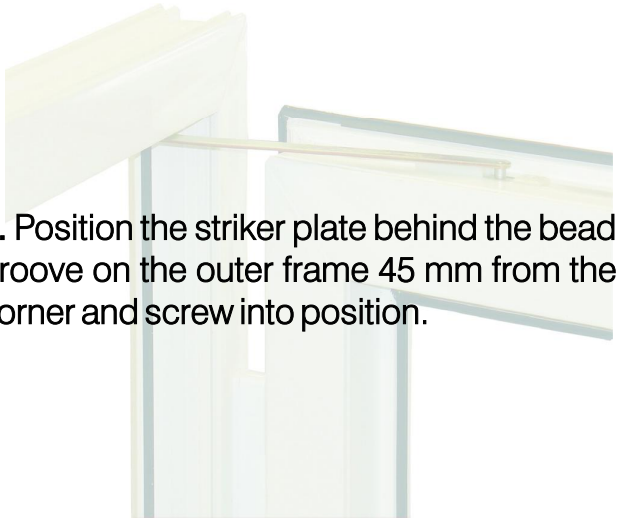

2. Position the striker plate behind the bead groove on the outer frame 45 mm from the corner and screw into position.

3. After hanging the sash, clip the arm of the *Tech 100 Stay* into the striker plate.

Note: Should additional friction be required simply tighten the hexagonal screw within the *Tech 100 Stay*.

MACO *Tech 100 Stay*

90 Degree break stay and restrictor for doors

Order information:

Tech 100 Stay with yellow chromate arm
Part no. **95100U**
Tech 100 Stay with stainless steel arm
Part no. **95430U**

Note: Striker plate included

www.macouk.net
Date - September 2005
MACO DOOR & WINDOW HARDWARE (U.K.) LTD. Eurolink Industrial Centre, Castle Road, Sittingbourne Kent, ME10 3LY.
Tel.: 01795 433900, Fax.: 01795 433901, e-mail:maco@macouk.net,

PDF created with FinePrint pdfFactory trial version http://www.fineprint.com