# Maco Multi Vent

## Limiting restrictor

Suitable for:

PVCu ✓ TIMBER ✓

**The Multi Vent limits the tilt and turn position on a tilt and turn window.**

**NOTE:** Not suitable for use as a safety restrictor.

## Features and Benefits

- **For use on tilt and turn windows**
- **Automatically engages**
- **Limits in tilt mode**
- **Lockable as standard**
- **Adjustable friction**
- **Can be retrofitted**
- **Also available in non locking version**
- **Limiter jig available**

Tilt mode restriction

Turn mode limit

Unrestricted

# Details

| Product | Product Code |
|---|---|
| Multi-Vent Limiter with 2mm Spacer Bar (brown) | MA12361 |
| Multi-Vent Limiter with 2mm Spacer Bar (white) | MA12360 |
| 5 degree Spacer Bar (brown) | MA42502 |
| 5 degree Spacer Bar (white) | MA42509 |
| 15 degree Spacer Bar (brown) | MA42513 |
| 15 degree Spacer Bar (white) | MA42514 |
| Restrictor Jig | MA42505 |

## Manufactured from

Lock case – zinc die cast
Locking arm – cold rolled mild steel

## Recommended screws

4mm (No.8) Countersunk Head

## Finishes

White RAL 9010
Brown RAL 8019

## More information
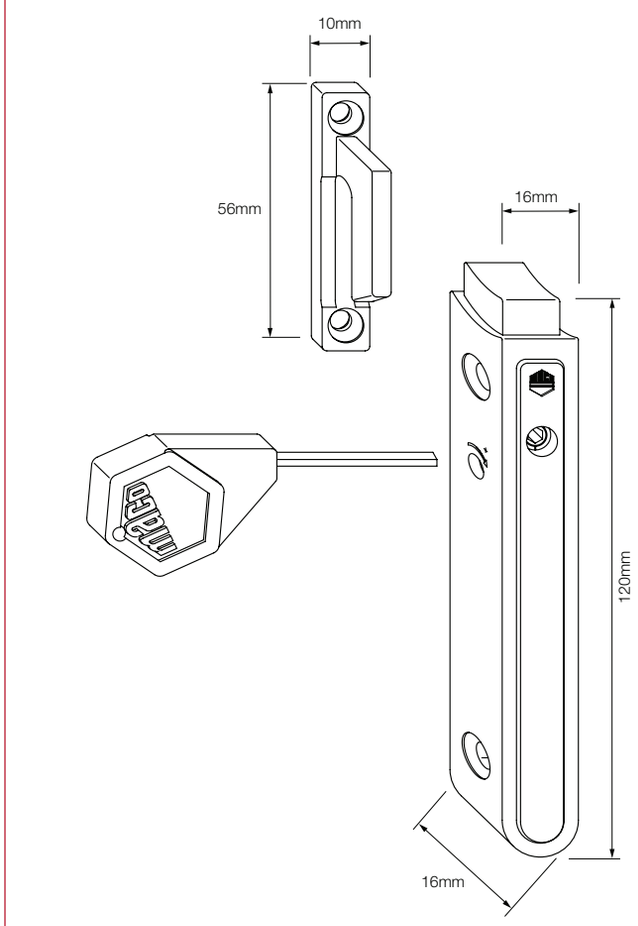
enquiries@titon.com / 01206 713801